Power Electronics
- Lecture 2

Yongsug Suh

CHONBUK
NATIONAL UNIVERSITY

Lecture 2 – Review on Basic Electrical Circuits

- Contents
  - Phasor representation under steady-state ac waveforms with sinusoidal voltages & currents
  - Definitions on various kinds of power
  - Example $\Rightarrow$ power factor improvement by capacitor bank

Steady-state AC waveforms with Sinusoidal Voltages & Currents

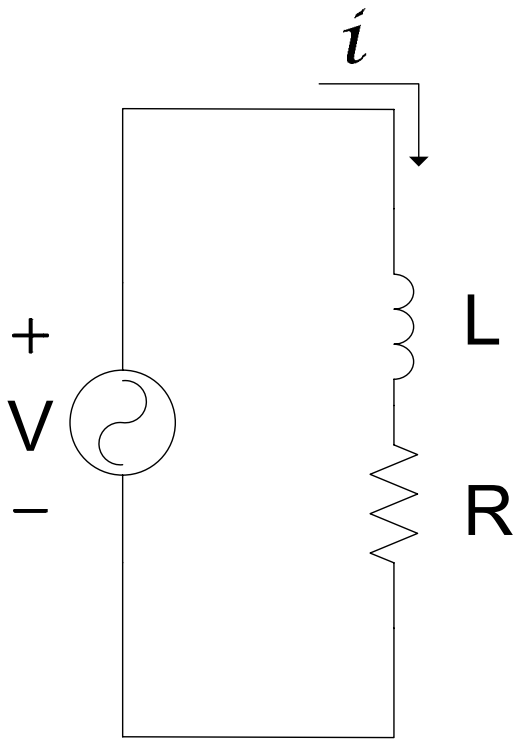

- Phasor representation

$$v = \sqrt{2}V\cos\omega t \Rightarrow \mathbf{V} = Ve^{jo}$$

$$i = \sqrt{2}I\cos(\omega t - \phi) \Rightarrow \mathbf{I} = Ie^{-j\phi}$$

$$\mathbf{V} = \mathbf{I}\cdot\mathbf{Z} = \mathbf{I}\cdot(R + jwL) = \mathbf{I}\cdot|Z|e^{j\phi} \Rightarrow \mathbf{I} = \frac{\mathbf{V}}{\mathbf{Z}} = \frac{Ve^{jo}}{|Z|e^{j\phi}} = Ie^{-j\phi}$$

Definitions on Various Kinds of Power

- Instantaneous active power $\overset{\Delta}{=} p(t) = v(t) \cdot i(t)$
- Complex power $\overset{\Delta}{=} \mathbf{S} = \mathbf{V} \cdot \mathbf{I}^* = VI \cdot e^{j\phi} = VI\cos\phi + jVI\sin\phi$
- Apparent power $\overset{\Delta}{=} |\mathbf{S}| = VI$ **[VA]**
- Average of instantaneous active power (real power)

$$\overset{\Delta}{=} P_{av} \overset{\Delta}{=} \frac{1}{T}\int_T p(t)dt = \mathrm{Re}[\mathbf{S}] = VI\cos\phi \quad \textbf{[W]}$$

- Average of instantaneous reactive power (reactive power)

$$\overset{\Delta}{=} Q_{av} = \mathrm{Im}[\mathbf{S}] = VI\sin\phi \quad \textbf{[VAR]}$$

$$\boxed{\therefore \quad \mathbf{S} = P_{av} + jQ_{av}}$$

Power Factor & RMS

- Power factor $\overset{\Delta}{=} \dfrac{\textbf{Real average power}}{\textbf{Apparent power}} = \dfrac{P_{av}}{|\mathbf{S}|}$

- RMS (Root – Mean – Square) value

$$P_{av} = \frac{1}{T}\int_T p(t)dt$$

$$= \frac{1}{T}\int_T R\cdot[i(t)]^2 dt \quad <= \text{In the case of R-load}$$

$$= R\cdot\frac{1}{T}\int_T [i(t)]^2 dt$$

$$= R\cdot I_{rms}^2 \qquad <= I_{rms} = \sqrt{\frac{1}{T}\int_T [i(t)]^2 dt}$$

"Same effective dc-current to produce same average power"

Example
– Power factor improvement by adding capacitor bank

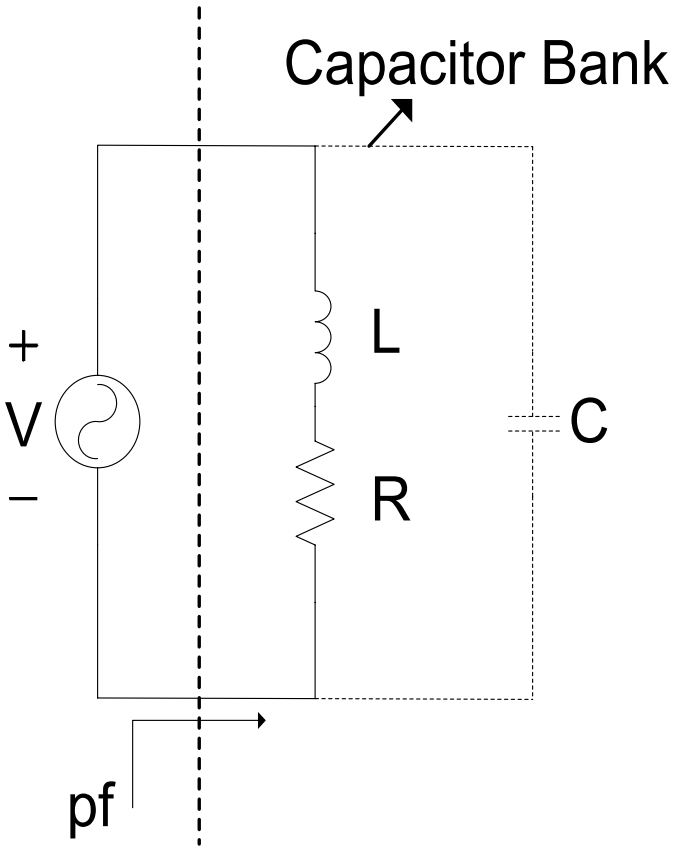

$$v = \sqrt{2} \cdot 120 \cos(2\pi \cdot 60t)[V]$$

$$P_{Load} = 1kw$$

Power factor = 0.8 lagging

Target power factor = 0.95 lagging

Example
– Power factor improvement by adding capacitor bank

$$|\mathbf{S}| = \frac{P_{Load}}{pf} = \frac{1kw}{0.8} = 1250\ \mathbf{VA} \qquad Q_{Load} = \sqrt{|\mathbf{S}|^2 - P_{Load}^2} = 750\ \mathbf{VAR}$$

$$|\mathbf{S}|_{new} = \frac{P_{Load}}{pf_{\mathbf{target}}} = \frac{1kw}{0.95} = 1052.6\,\mathbf{VA}$$

$$Q_{Load,new} = \sqrt{|\mathbf{S}|_{new}^2 - P_{Load}^2} = 328.7\,\mathbf{VAR}$$

$$Q_{Load,new} = Q_{Load} - Q_c \Leftarrow \mathbf{S}_{new} = P_{load} + jQ_{Load} - jQ_c$$

$$Qc = 421.3\,\mathbf{VAR}$$

$$Qc = \frac{V^2}{X_c} = \frac{V^2}{1/wC} = V^2 wC$$

$$\therefore C = \frac{Q_c}{V^2 w} = \frac{421.3}{120^2 \cdot 2\pi \cdot 60} = 77.6uF$$

MISSION
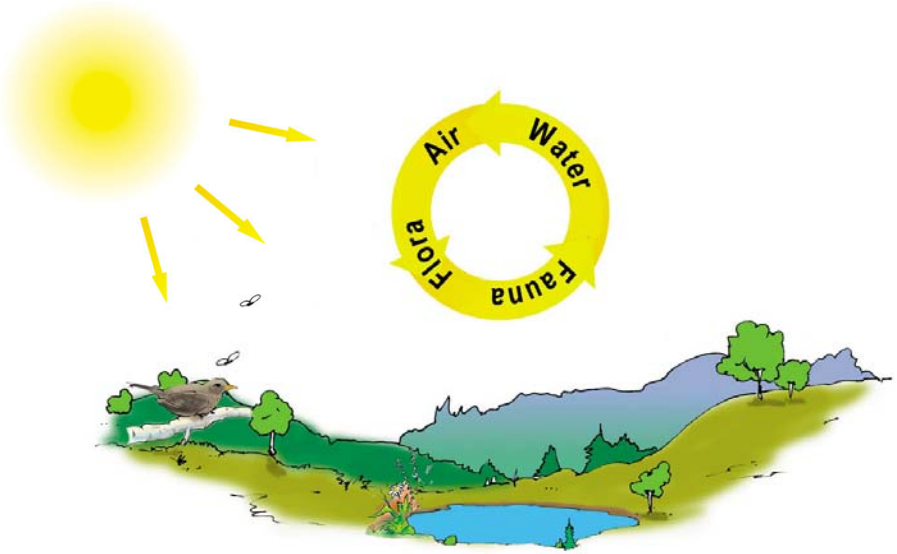
The Laboratory performs the research and educational activity in the area of electrical system that can be applied in environmental-friendly & sustainable energy conversion process.